# MOBILE WHITE BOARD

Installation Manual V1.0

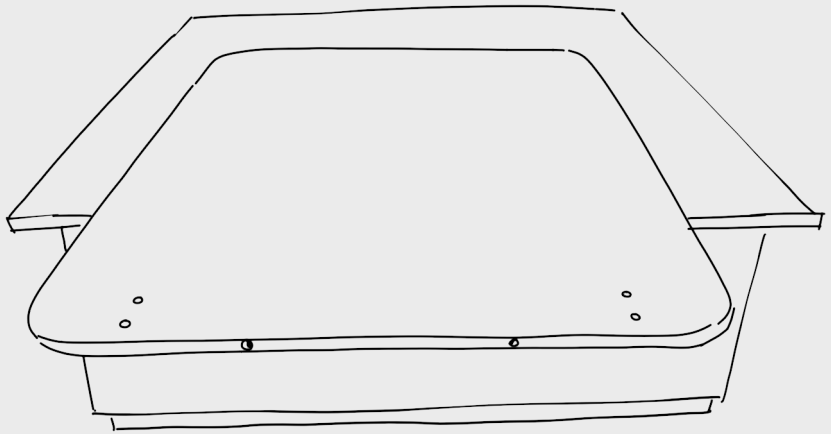

STEP 1 : PLACE THE MINGLE BOARD ON A FLAT SURFACE (EG. TABLE) WITH THE BOTTOM EDGE OVER HANGING BY A FEET

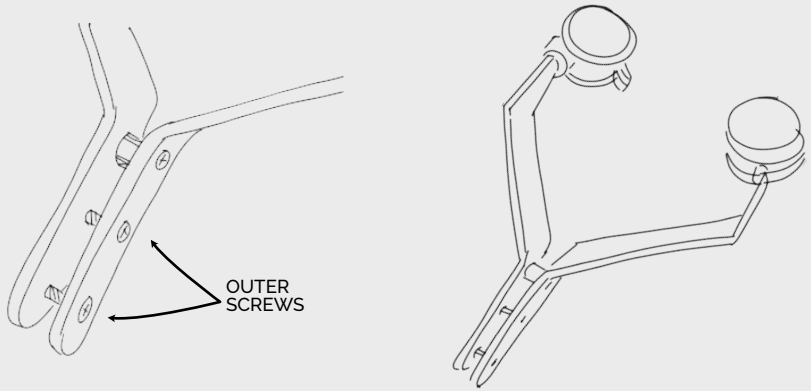


STEP 2 : REMOVE THE TWO OUTER SCREWS FROM THE LEG ASSEMBLY AND INSERT IT INTO THE BOARD. PLEASE NOTE THE ORIENTATION OF THE LEG. AS PER IMAGE IN STEP 4

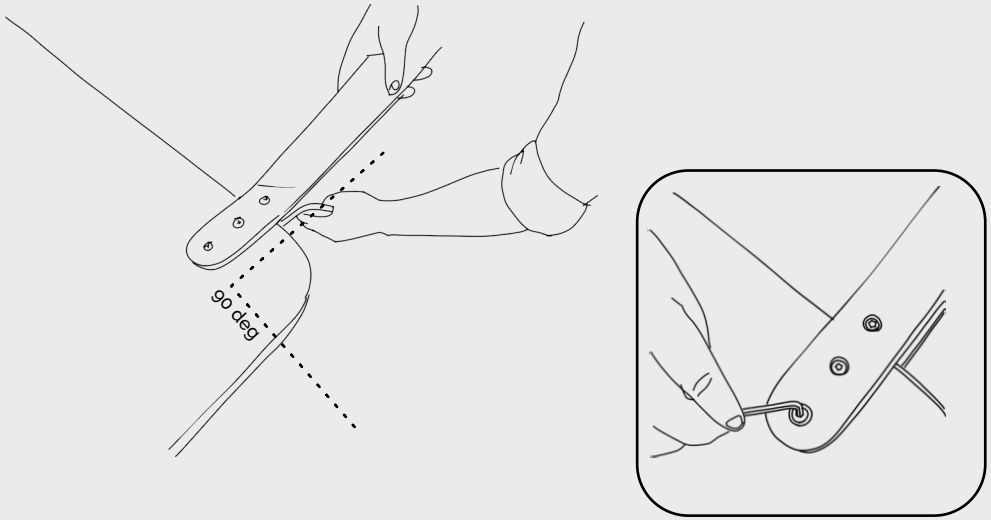


STEP 3 : AFTER INSERTING THE LEG, MATCH THE HOLES AND TIGHTEN THE SCREWS WITH ALLEN KEY PROVIDED. MAINTAIN THE LEG AT RIGHT ANGLE TO THE SIDES.

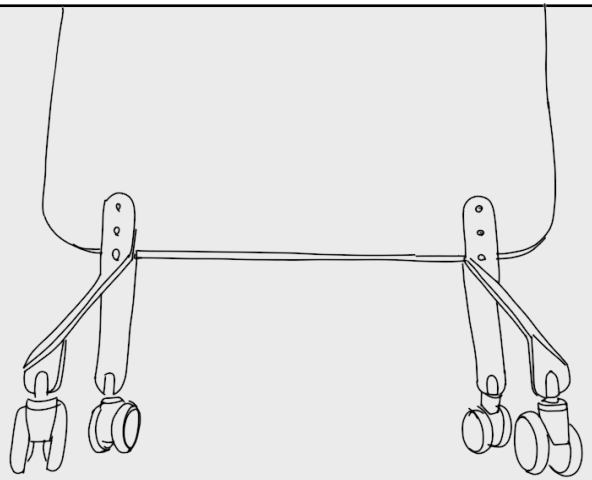

STEP 4 : PLACE THE BOARD ON A PLANE GROUND AND CHECK WHETHER ALL THE WHEELS ARE TOUCHING THE GROUND. IF NOT, LOOSEN THE TWO SCREWS AND TIGHTEN BACK AGAIN.

Designed and Manufactured by Gemklip.com, A brand of Teqzo Retail Products Pvt Ltd. Bangalore, India.
Toll Free: 1800 57 27 967 (India) | Email: join@gemklip.com URL: www.gemklip.com

# CLASSIC BOARD - MARKER TRAY MOUNTING



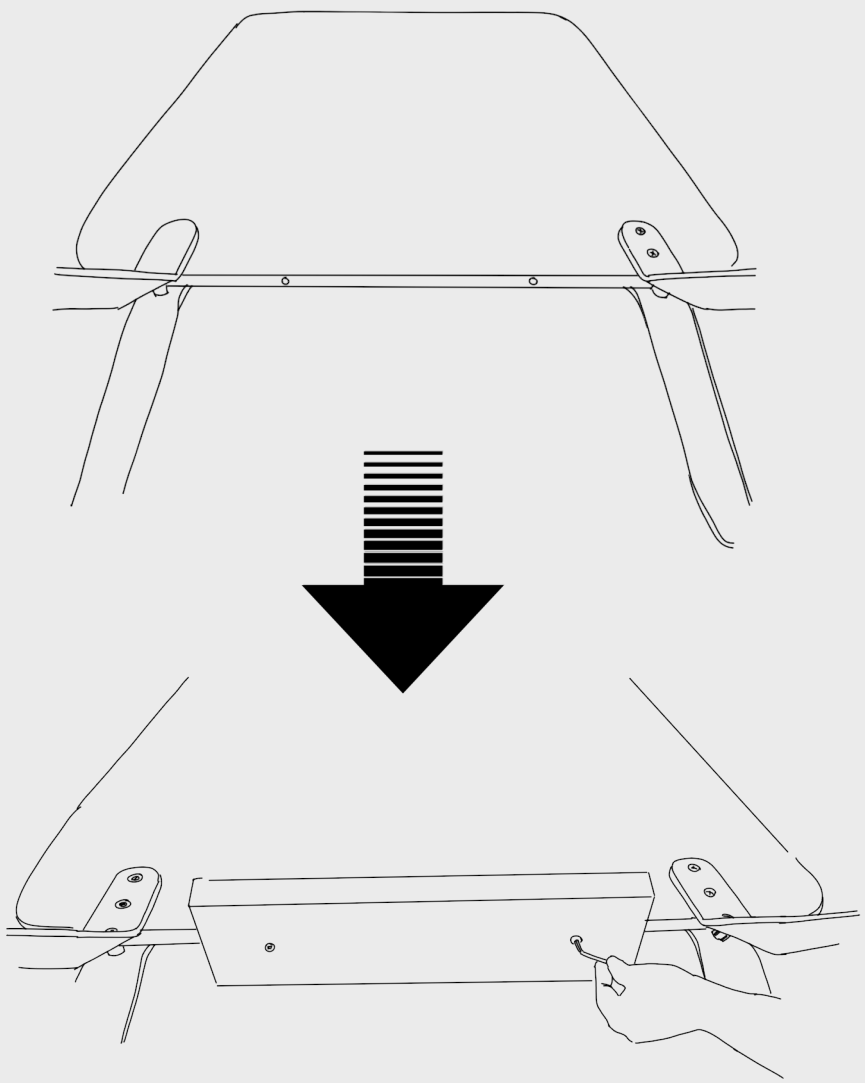

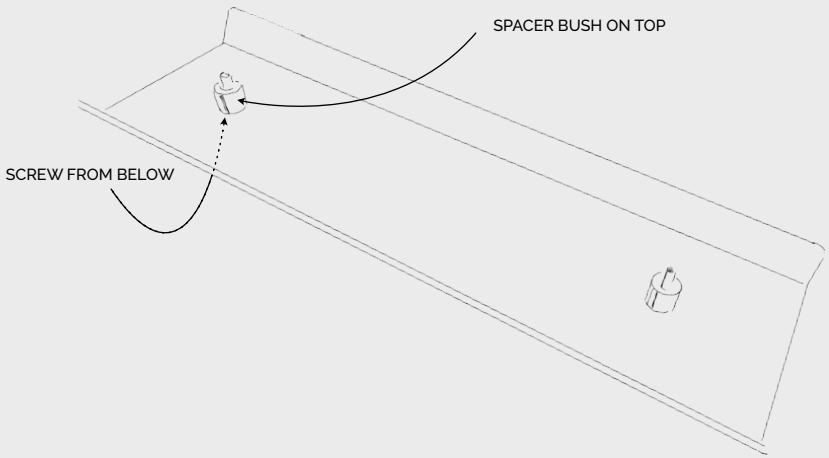


STEP 1 : PREPARE THE MARKER TRAY BY PLACING THE SPACER BUSH ABOVE AND SCREW FROM BELOW

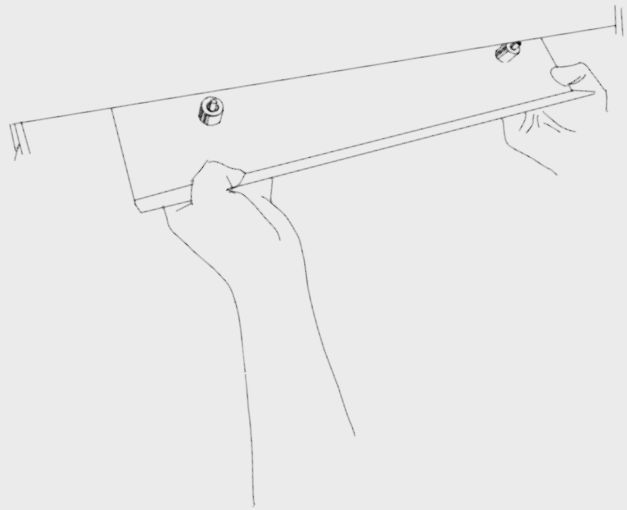

STEP 2 : PLACE THE MARKER TRAY ASSEMBLY MATCHING THE LOCATIONS ON THE BOARD AND TIGHTEN THE M USING THE ALLEN KEY PROVIDED.